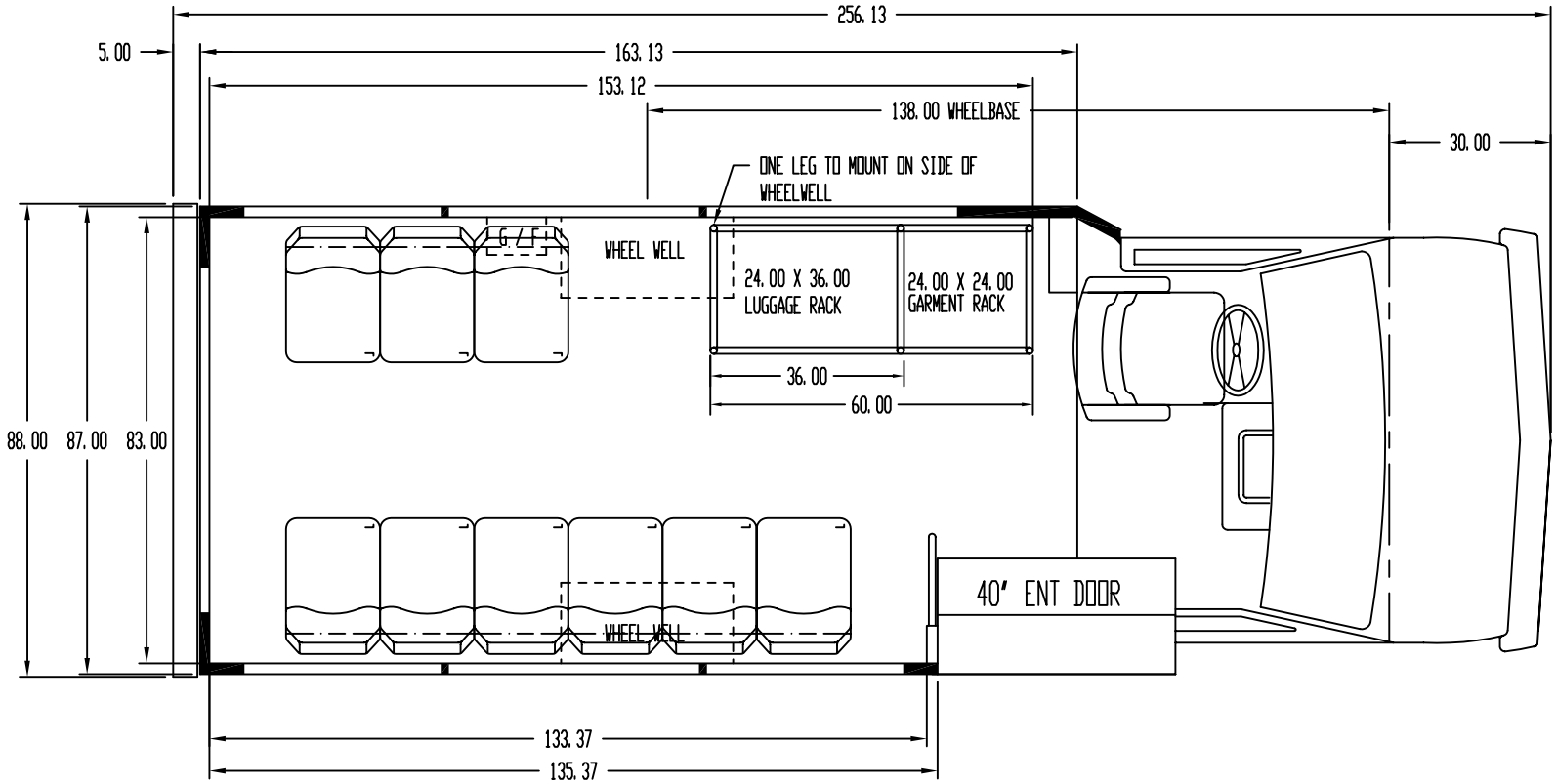

OPTION 2

REV	DATE	ECN	DESC. OF CHANGES	BY	APP'D

PART NO. MIS 1_19A

CHAMPION BUS INC.
a THOR company

ECN # N/A

DO NOT SCALE

MATERIAL: FREEDMAN SEATS - LOW BACK FEATHERWEIGHT

TOLERANCES UNLESS OTHERWISE NOTED
.XX = .03
.XXX = .020
X° = 1°

DRAWN BY: P RUHALA
DATE: 1/20/06
CHK.
DATE:
SCALE:
APP'D
DATE:

PURCH./MFG.: MFG.

TITLE:
FLOORPLAN CR-210
138.00' W/B ** 40 ENT. DOOR **
(9) PASSENGERS

MODEL
CRUSADER